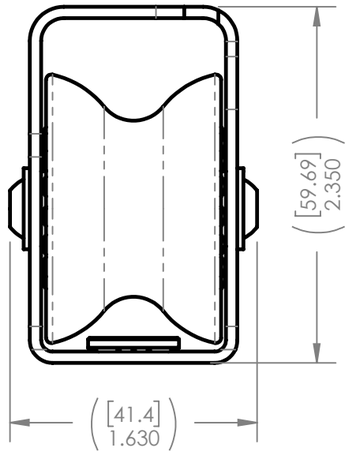

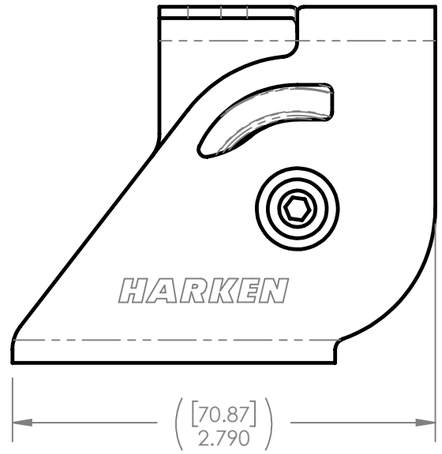

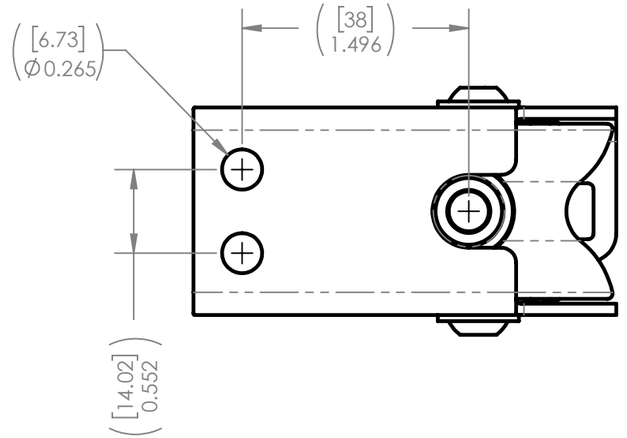

HARKEN®
INCORPORATED

N15 W24983 Bluemound Road
Pewaukee, Wisconsin 53072
Tel: 262-691-3320
Fax: 262-691-3807
www.harken.com

DIMENSIONS IN OVALS ARE KEY PRODUCT CHARACTERISTICS

UNLESS OTHERWISE SPECIFIED:
- DIMENSIONS IN INCHES
- ALL DIMENSIONS PRIOR TO FINISHING
- REMOVE ALL BURRS AND BREAK SHARP EDGES WITH 0.010 MAX RADIUS OR CHAMFER

TOLERANCES UNLESS OTHERWISE SPECIFIED:

DECIMAL: ± -

ANGULAR: ± - °

SURFACE FINISH: - √

ASSEMBLY
45MM OTT BLOCK

DRAWING NUMBER: H-91036

REV.: 1

MATERIAL: -

PART # 9033

FINISH: -

SHEET NUMBER: 2/2

SCALE: 1:1

© The designs, constructions, arrangements, disclosures and devices illustrated in presentations bearing this note are the property of Harken, Inc, Pewaukee, WI and are submitted in confidence with the understanding that such material shall not be utilized in any way by any party without prior written consent from Harken, Inc.

DESIGN BY :	GH	DATE: 10-25-23
DRAWN BY :	GH	DATE: 10/25/2023
ENG. APR :	JJM	DATE: 12/13/2023
MFG. APR :	RMD	DATE: 5/8/24